e-Genius Powered by Latch®
5 1/2" CTC Template ASA Strike

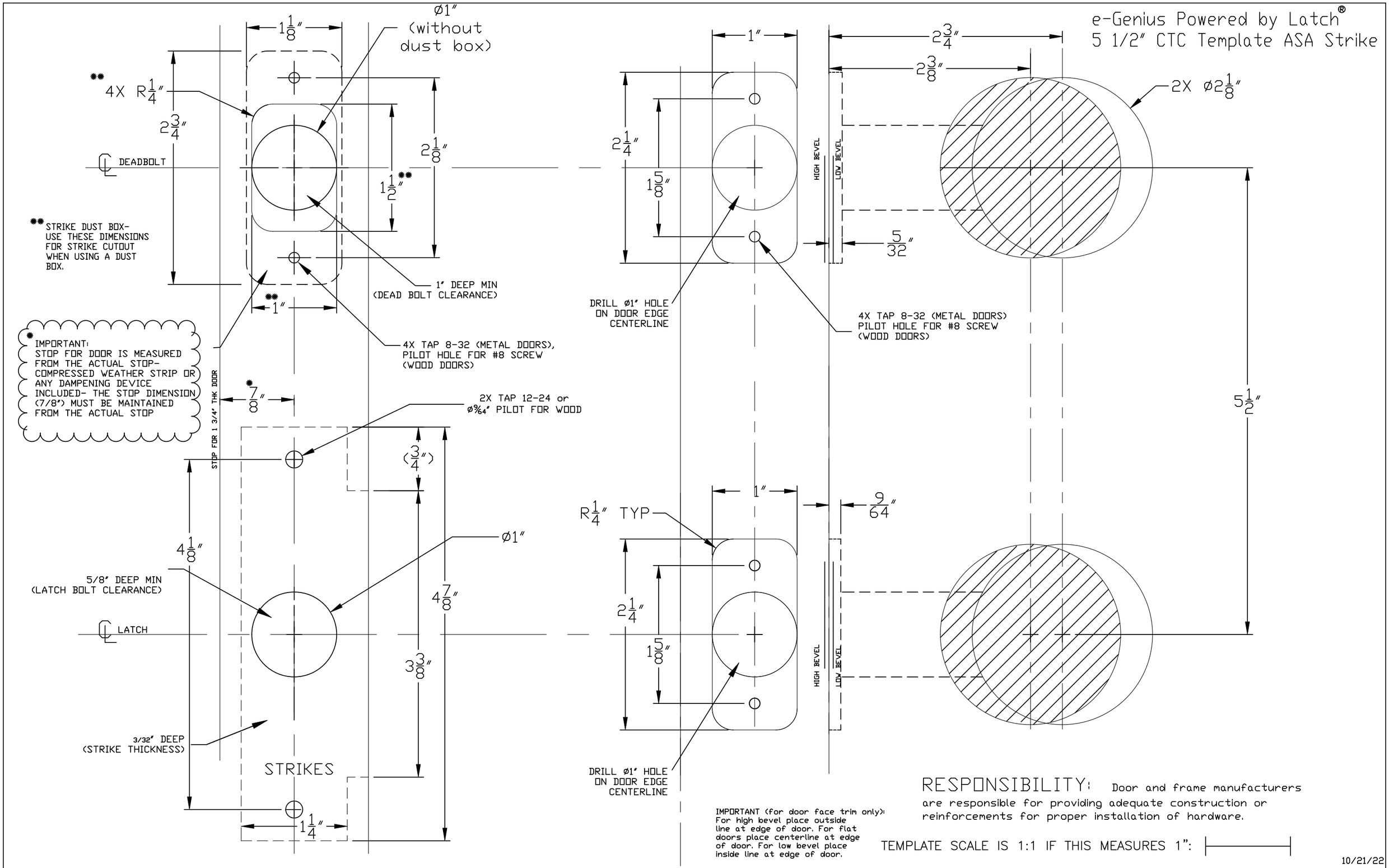

e-Genius Powered by Latch®
5 1/2" CTC Template ASA Strike

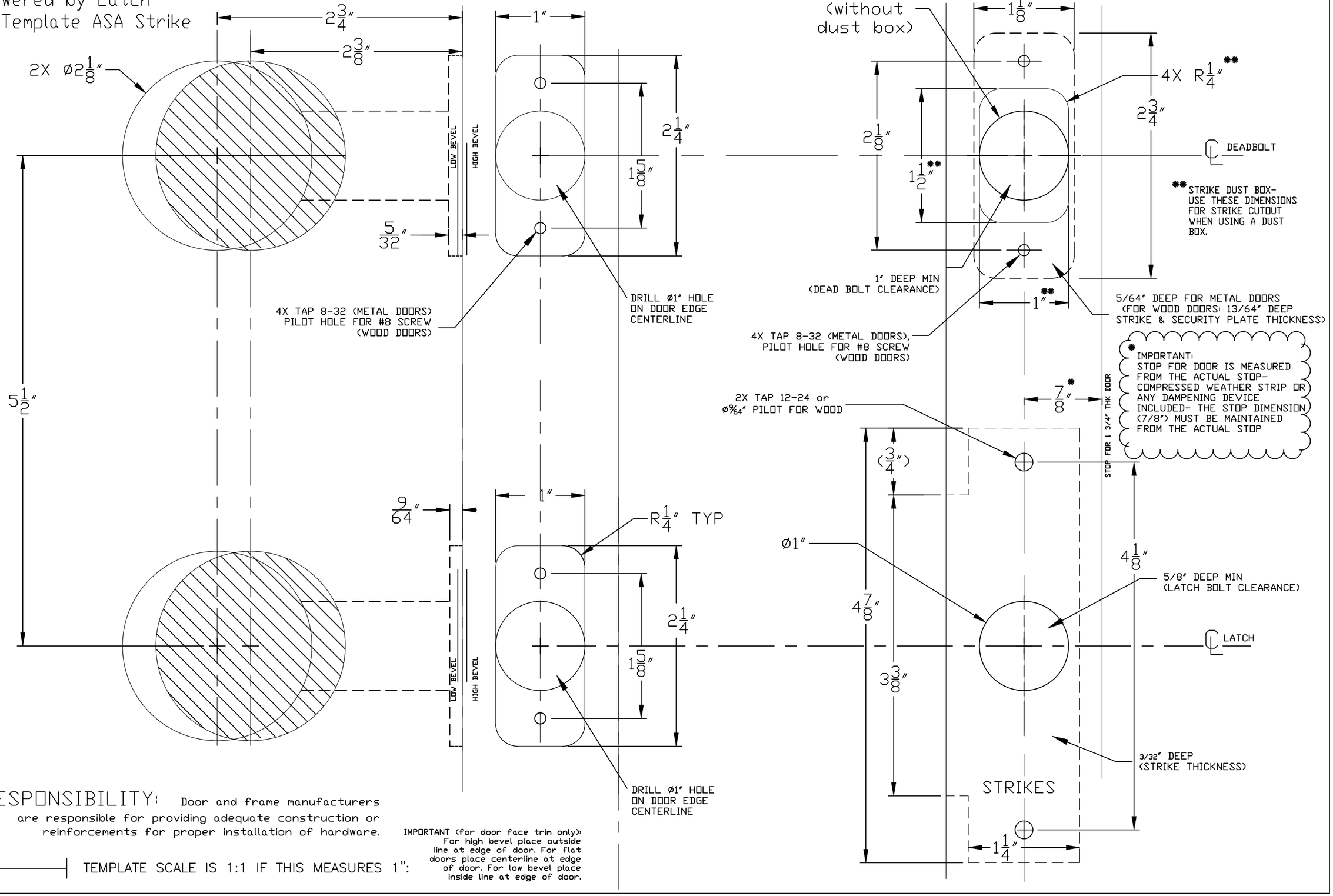

RESPONSIBILITY: Door and frame manufacturers are responsible for providing adequate construction or reinforcements for proper installation of hardware.

TEMPLATE SCALE IS 1:1 IF THIS MEASURES 1":

IMPORTANT (for door face trim only): For high bevel place outside line at edge of door. For flat doors place centerline at edge of door. For low bevel place inside line at edge of door.

10/21/22